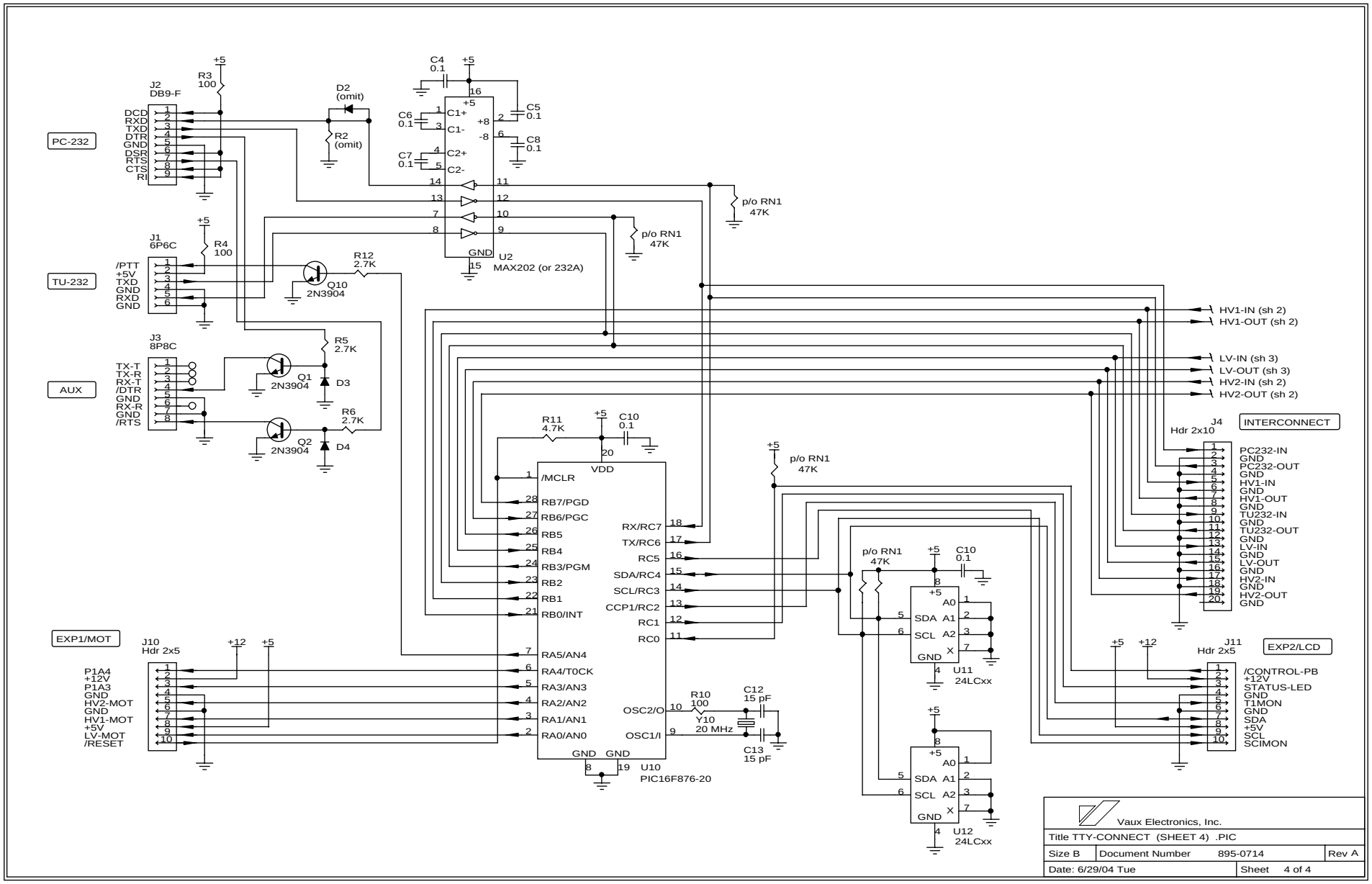
PC-232
J2
DB9-F
DCD
RXD
TXD
DTR
GND
DSR
RTS
CTS
RI
R3
100
+5
D2
(omit)
R2
(omit)
C4
0.1
C5
0.1
C6
0.1
C7
0.1
C8
0.1
C1+
C1-
C2+
C2-
+8
-8
GND
U2
MAX202 (or 232A)
p/o RN1
47K
TU-232
J1
6P6C
/PTT
+5V
TXD
GND
RXD
GND
R4
100
R12
2.7K
Q10
2N3904
AUX
J3
8P8C
TX-T
TX-R
RX-T
/DTR
GND
RX-R
GND
/RTS
R5
2.7K
Q1
2N3904
D3
R6
2.7K
Q2
2N3904
D4
R11
4.7K
C10
0.1
VDD
/MCLR
RB7/PGD
RB6/PGC
RB5
RB4
RB3/PGM
RB2
RB1
RB0/INT
RX/RC7
TX/RC6
RC5
SDA/RC4
SCL/RC3
CCP1/RC2
RC1
RC0
RA5/AN4
RA4/T0CK
RA3/AN3
RA2/AN2
RA1/AN1
RA0/AN0
OSC2/O
OSC1/I
R10
100
Y10
20 MHz
C12
15 pF
C13
15 pF
U10
PIC16F876-20
HV1-IN (sh 2)
HV1-OUT (sh 2)
LV-IN (sh 3)
LV-OUT (sh 3)
HV2-IN (sh 2)
HV2-OUT (sh 2)
J4
Hdr 2x10
INTERCONNECT
PC232-IN
GND
PC232-OUT
GND
HV1-IN
GND
HV1-OUT
GND
TU232-IN
GND
TU232-OUT
GND
LV-IN
GND
LV-OUT
GND
HV2-IN
GND
HV2-OUT
GND
EXP1/MOT
J10
Hdr 2x5
+12
P1A4
+12V
P1A3
GND
HV2-MOT
GND
HV1-MOT
+5V
LV-MOT
/RESET
A0
A1
A2
SDA
SCL
GND
X
U11
24LCxx
U12
24LCxx
J11
Hdr 2x5
EXP2/LCD
/CONTROL-PB
+12V
STATUS-LED
GND
T1MON
GND
SDA
+5V
SCL
SCIMON
Vaux Electronics, Inc.
Title TTY-CONNECT (SHEET 4) .PIC
Size B
Document Number 895-0714
Rev A
Date: 6/29/04 Tue
Sheet 4 of 4